Abschaltventile

END STROKE VALVES

Abschaltventil - unbetätigt offen

TYPE

V-FCR 1T

HYDRAULIC DIAGRAM

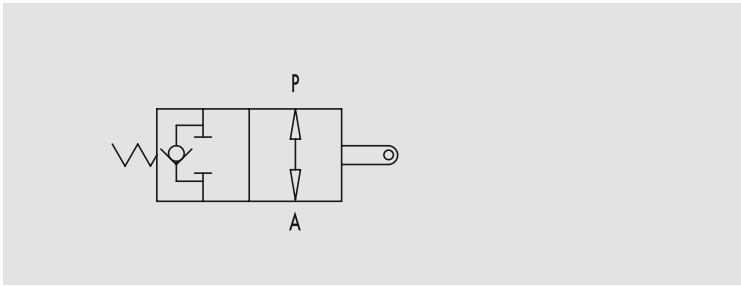

END STROKE VALVES, NORMALLY OPENED

USE AND OPERATION:
This valve is used to stop oil inlet in a hydraulic circuit or to stop actuator's stroke (normally opened valve). The valve closing, obtained by pulling or pushing the slider, allows an immediate and total stop of the oil flow.

MATERIALS AND FEATURES:
Body: cast iron
Internal parts: grounded and hardened steel
Seals: BUNA N standard
Tightness: minor leakage

APPLICATIONS:
Connect P to the distributor and A to the circuit or to the actuator. When slider is operating, flow is blocked from P towards A, whilst the check valve enables free oil flow in the reverse direction (from A towards P).

PRESSURE DROPS CURVE

Oil temperature: 50° C - Oil viscosity: 30 cSt

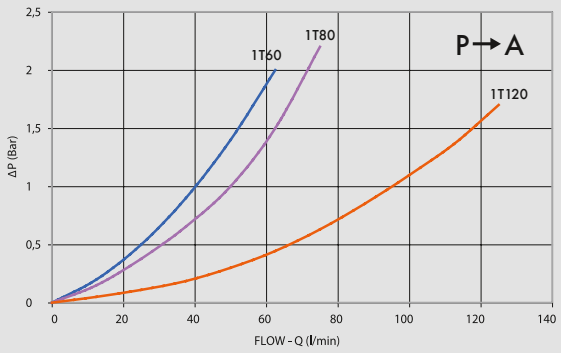

ABITEK
Hydraulik • Antriebstechnik

CODE	TYPE	MAX FLOW Lt. / min	MAX PRESSURE Bar	START CLOSING mm	POWER Kg (±10%)	MAX STROKE mm	POWER Kg (±10%)
V0824	V-FCR 1T 60	60	350	7	6,5	20,5	18
V0826	V-FCR 1T 80	80	350	7	6,5	20,5	18
V0825	V-FCR 1T 120	120	350	9	33	15,5	50

V-FCR 1T 60-80

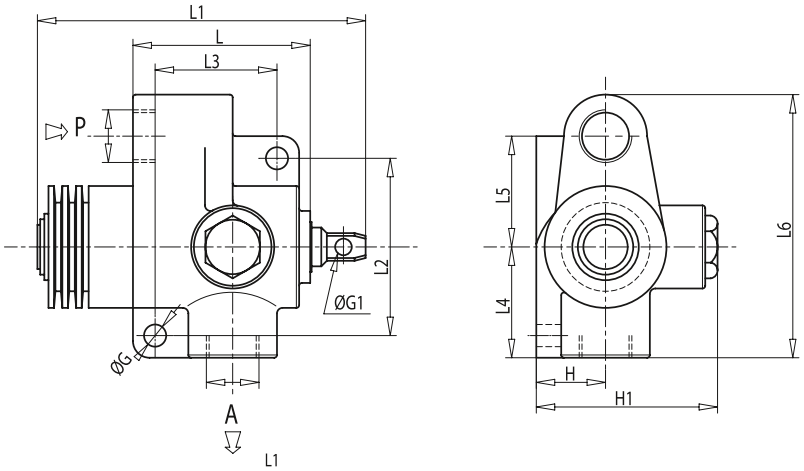

V-FCR 1T 120

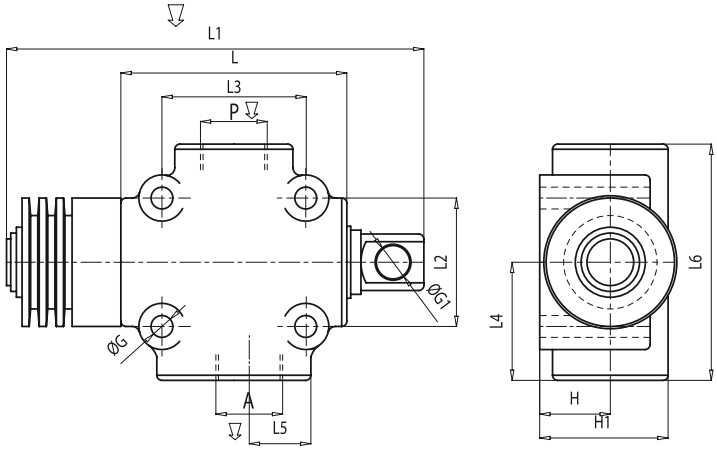

CODE	TYPE	A-P GAS	L mm	L1 mm	L2 mm	L3 mm	L4 mm	L5 mm	L6 mm	ØG mm	ØG1 mm	H mm	H1 mm	WEIGHT Kg.
V0824	V-FCR 1T 60	G 3/8″	69	130	66	45	45	41	103	8,5	6,5	26	68	1,628
V0826	V-FCR 1T 80	G 1/2″	69	130	66	45	45	41	103	8,5	6,5	26	68	1,616
V0825	V-FCR 1T 120	G 3/4″	88	173	50	56	46	23,5	92	8,5	13	27,5	50	2,112

Abschaltventil - unbetätigt geschlossen

TYPE

V-FCR 2T

HYDRAULIC DIAGRAM

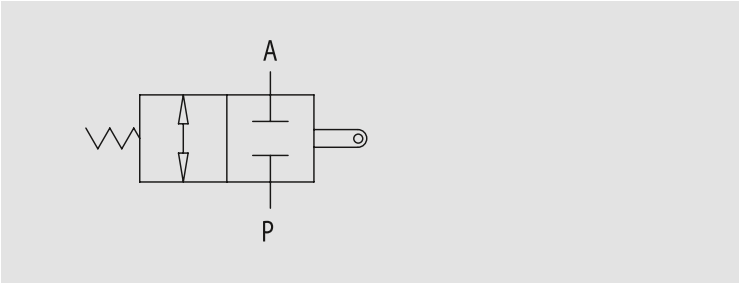

END STROKE VALVES, NORMALLY CLOSED

USE AND OPERATION:
This valve is used to enable oil inlet in a hydraulic circuit (normally closed valve). The valve opens by pulling or pushing the slider.

MATERIALS AND FEATURES:
Body: cast iron
Internal parts: grounded and hardened steel
Seals: BUNA N standard
Tightness: minor leakage

APPLICATIONS:
Connect independently A and P to the distributor and to the circuit. When slider is operating, flow is free in both directions, vice versa it is blocked.

PRESSURE DROPS CURVE

Oil temperature: 50° C - Oil viscosity: 30 cSt

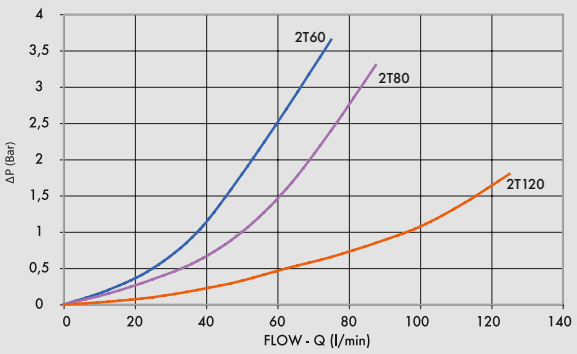

ABITEK
Hydraulik • Antriebstechnik

CODE	TYPE	MAX FLOW Lt. / min	MAX PRESSURE Bar	START CLOSING mm	POWER Kg (±10%)	MAX STROKE mm	POWER Kg (±10%)
V0820	V-FCR 2T 60	60	350	7	6,5	20,5	18
V0822	V-FCR 2T 80	80	350	7	6,5	20,5	18
V0823	V-FCR 2T 120	120	350	9	33	15,5	50

V-FCR 2T 60-80

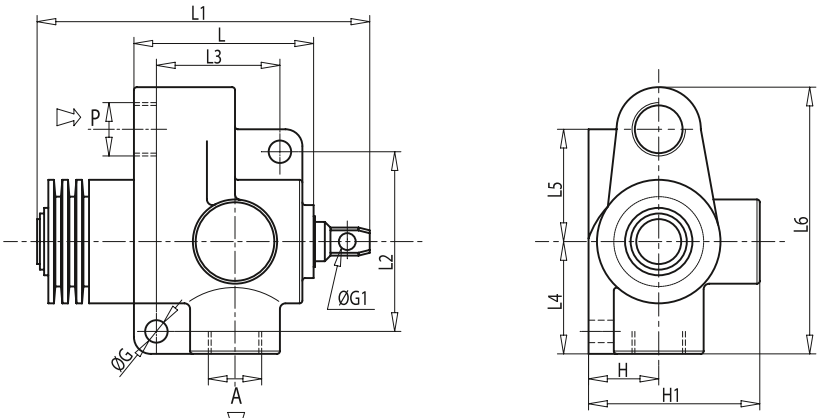

V-FCR 2T 120

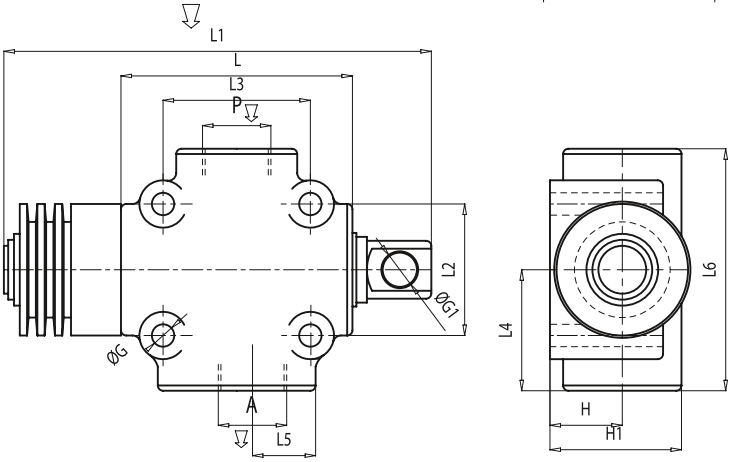

CODE	TYPE	A-P GAS	L mm	L1 mm	L2 mm	L3 mm	L4 mm	L5 mm	L6 mm	ØG mm	ØG1 mm	H mm	H1 mm	WEIGHT Kg.
V0820	V-FCR 2T 60	G 3/8″	69	130	66	45	45	41	103	8,5	6,5	26	68	1,648
V0822	V-FCR 2T 80	G 1/2″	69	130	66	45	45	41	103	8,5	6,5	26	68	1,652
V0823	V-FCR 2T 120	G 3/4″	88	179	50	56	46	23,5	92	8,5	13	27,5	50	2,204

Abschaltventil - stößelbetätigt - unbetätigt geschlossen

TYPE
VF-NC

HYDRAULIC DIAGRAM

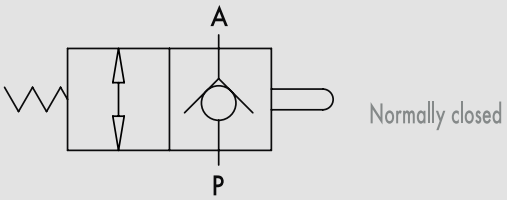

PUSHBUTTOM END STROKE VALVES, NORMALLY CLOSED

USE AND OPERATION:
This valve allows oil passage in a hydraulic circuit (normally closed valve). Once the slider is set into action, oil flow is free from P to A. It can be used:
a) to set the sequence of 2 actuators;
b) as end strokes valve, where flow is directly connected to the tank.

MATERIALS AND FEATURES:
Body: zinc-plated steel
Internal parts: grounded and hardened steel
Seals: BUNA N standard
Ball type: any leakage
Maximum stroke: 13 mm
Prompt opening

APPLICATIONS:
Connect A directly to the tank and P as for necessity.
Mounting scheme can vary according to the use.

PRESSURE DROPS CURVE

Oil temperature: 50° C - Oil viscosity: 30 cSt

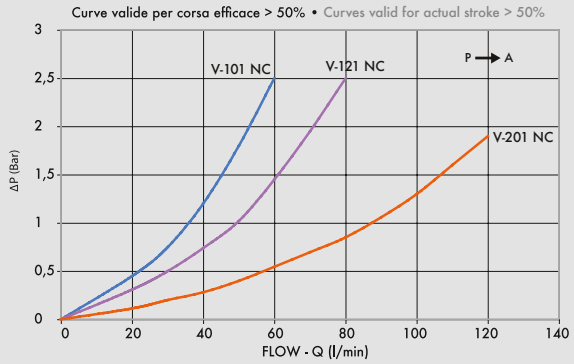

ABITEK
Hydraulik • Antriebstechnik

CODE	TYPE	MAX FLOW Lt. / min	MAX PRESSURE Bar
V0827	V - 101 3/8" NC	50	350
V0828	V - 121 1/2" NC	70	350
V0829	V - 201 3/4" NC	100	350

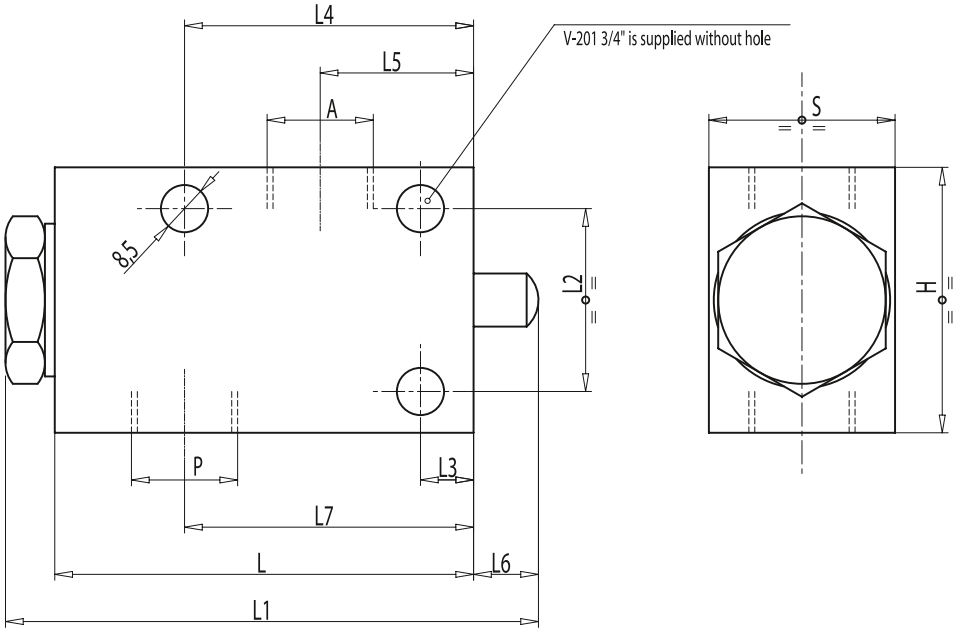

CODE	TYPE	A-P GAS	L mm	L1 mm	L2 mm	L3 mm	L4 mm	L5 mm	L6 mm	L7 mm	H mm	S mm	WEIGHT Kg.
V0827	V-101 3/8" NC	G 3/8"	80	105	35	10	55	30	14	55	50	35	0,962
V0828	V-121 1/2" NC	G 1/2"	80	105	35	10	55	28,5	14	55	50	35	0,934
V0829	V-201 3/4" NC	G 3/4"	88	115	50	20	68	23	14	61	70	45	0,860

Abschaltventil - rollhebelbetätigt - unbetätigt geschlossen

TYPE

V-FCC NC

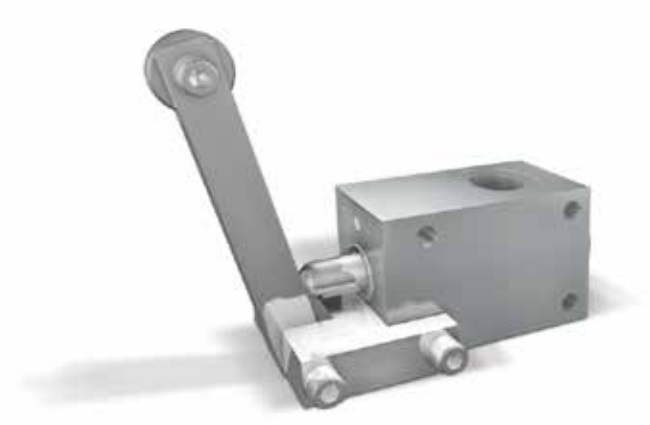

HYDRAULIC DIAGRAM

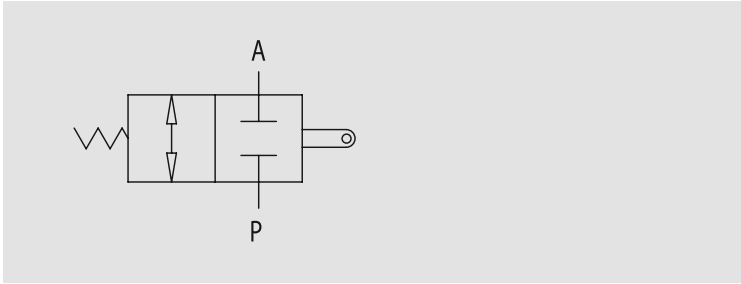

MECHANICAL DRIVE END STROKE VALVES, NORMALLY CLOSED

USE AND OPERATION:
This valve allows oil passage in a hydraulic circuit (normally closed valve). Once the slider is set into action, oil flow is free from P to A. It can be used:
a) to set the sequence of 2 actuators;
b) as an end strokes valve, where flow is directly connected to the tank.

MATERIALS AND FEATURES:
Body: zinc-plated steel
Internal parts: grounded and hardened steel
Seals: BUNA N standard
Ball type: any leakage

APPLICATIONS:
Connect A directly to the tank and P as for necessity.
Mounting scheme can vary according to the use.

PRESSURE DROPS CURVE

Oil temperature: 50° C - Oil viscosity: 30 cSt

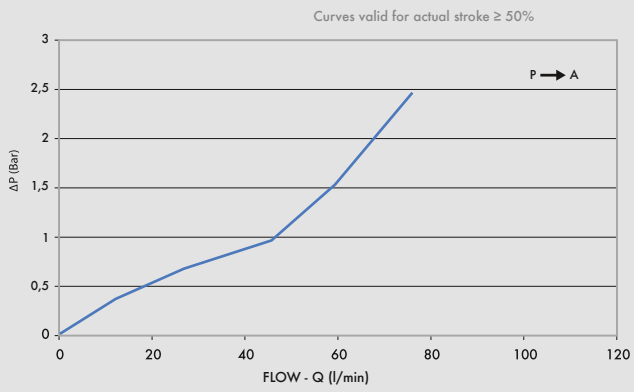

ABITEK
Hydraulik • Antriebstechnik

CODE	TYPE	MAX FLOW Lt. / min	MAX PRESSURE Bar
V0815	V - FCC 1/2" NC	70	350

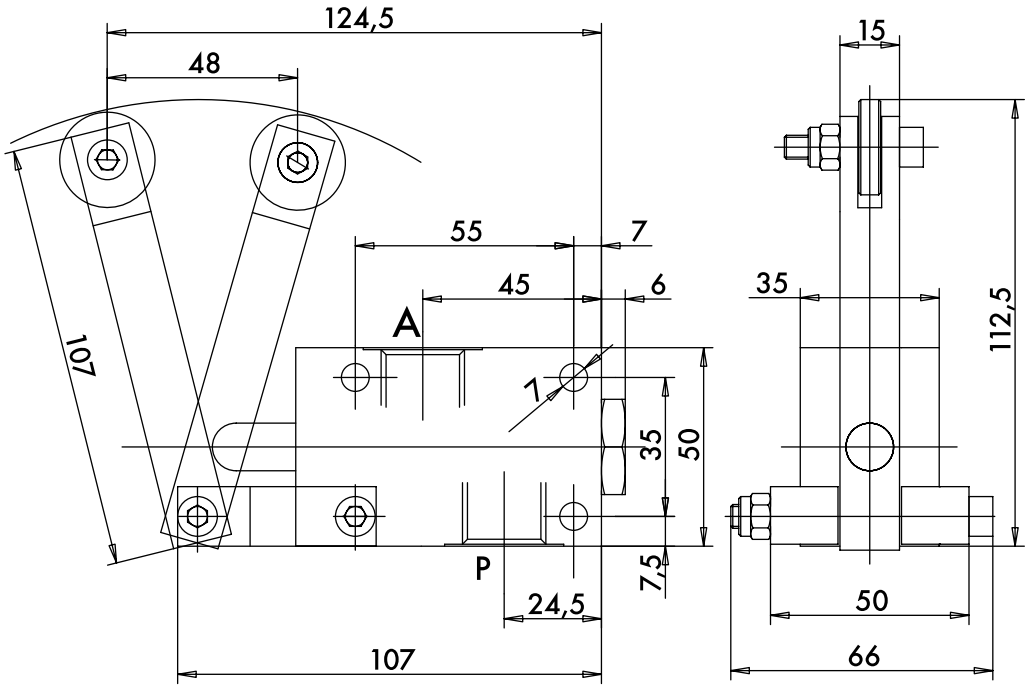

Abschaltventil - stößelbetätigt - unbetätigt offen

TYPE
VF-NA

HYDRAULIC DIAGRAM

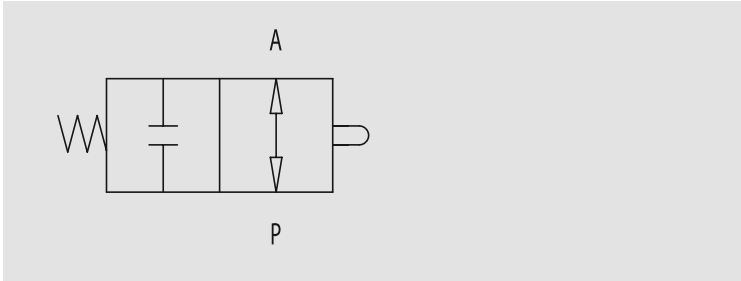

PUSHBUTTOM END STROKE VALVES, NORMALLY OPENED

USE AND OPERATION:
This valve is used to block oil passage in a hydraulic circuit (normally opened valve). The valve closes by pushing mechanically the slider.

MATERIALS AND FEATURES:
Body: zinc-plated steel
Internal parts: grounded and hardened steel
Seals: BUNA N standard
Ball type: minor leakage
Maximum stroke: 15 mm
Closing after 4 mm stroke

APPLICATIONS:
Connect independently A or P to the distributor and to the circuit. When slider is operating flow is blocked in both direction, vice versa it is free.

PRESSURE DROPS CURVE

Oil temperature: 50° C - Oil viscosity: 30 cSt

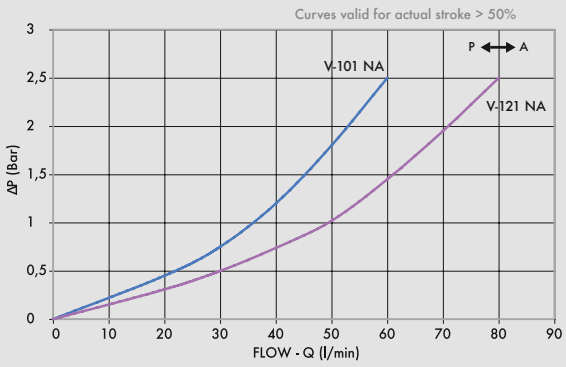

ABITEK
Hydraulik • Antriebstechnik

CODE	TYPE	MAX FLOW Lt. / min	MAX PRESSURE Bar
V0817	V - 101 3/8" NA	45	350
V0818	V - 121 1/2" NA	60	350

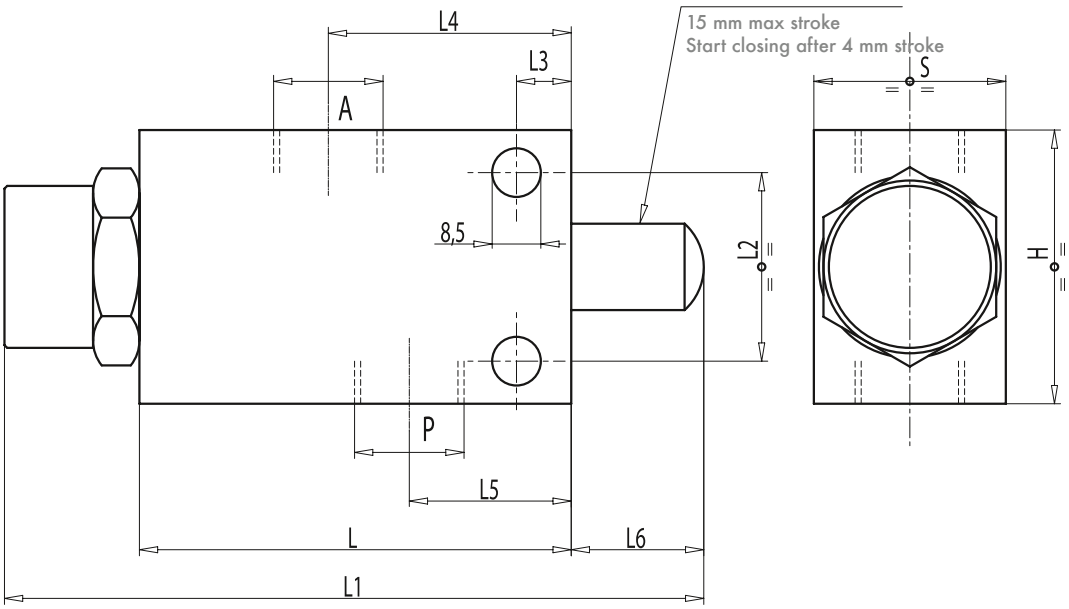

CODE	TYPE	A-P GAS	L mm	L1 mm	L2 mm	L3 mm	L4 mm	L5 mm	L6 mm	H mm	S mm	WEIGHT Kg.
V0817	V-101 3/8" NA	G 3/8"	80	129	35	8	45	30	24	56	35	1,240
V0818	V-121 1/2" NA	G 1/2"	80	129	35	8	45	30	24	62	35	1,380